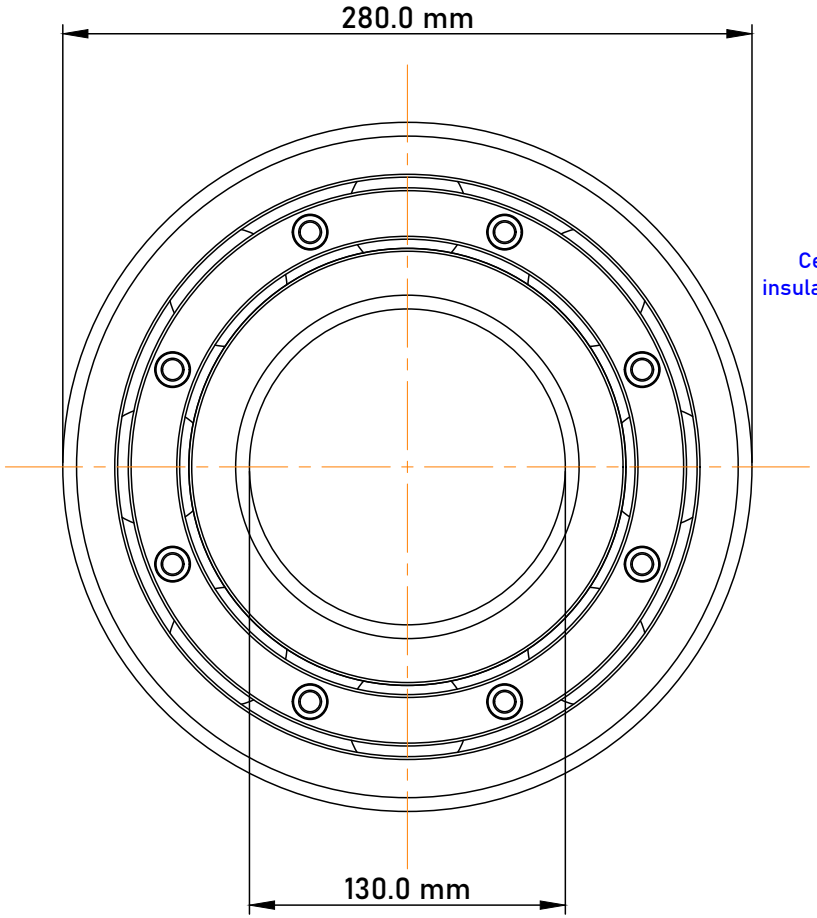

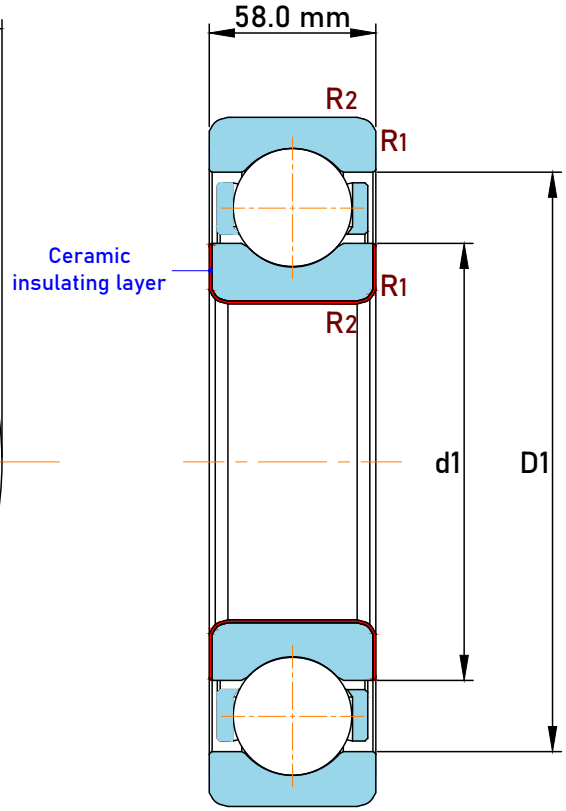

Net Weight	17.3kg
Basic Dynamic Load Rating	229.0 kN
Basic Static Load Rating	216.0 kN
Reference Speed	5000.0 r/min
Breakdown Voltage (DC)	1000 ~3000 V
Layer Thickness	100~500 μm
Electrical Resistance	50~200 MΩ
Cage Material	Brass cage

TFL
ELECTRICALLY INSULATED BEARINGS

TFL Bearings Manufacturing Co., Ltd.

Jinan City, Shandong Province, China
https://www.insulated-bearings.com
info@sdtflbearing.com
+86 15806631151

This file and any associated information and specifications are provided for reference and evaluation purposes only, and is subject to change without notice. TFL makes no representations, warranties or guarantees as to the appropriateness, accuracy, completeness, or suitability for any purpose, of the file, information or specifications. You are solely responsible for the use of the file, information or specifications.

Part Number	6326M/C3VL2071, Electrically Insulated Ball Bearings
Size	130.0 mm x 280.0 mm x 58.0 mm
Brand	TFL